AC/DC CAPACITIVE PROXIMITY SWITCH PLASTIC HOUSING SQUARE TYPE

Q35x55x15		Q35x55x15		Q40x50x17	
●	○	●	○	●	○
2-25mm (adjustable)	2-35mm (adjustable)	2-25mm (adjustable)	2-35mm (adjustable)	2-30mm (adjustable)	2-40mm (adjustable)
PBT RESIN		PBT RESIN		PBT RESIN	
●		●		●	

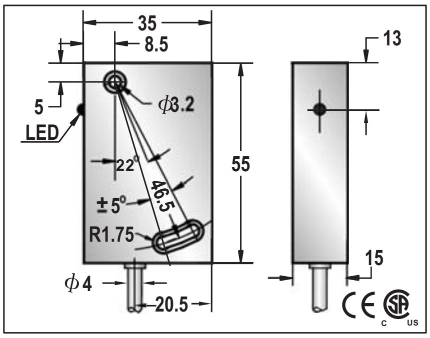

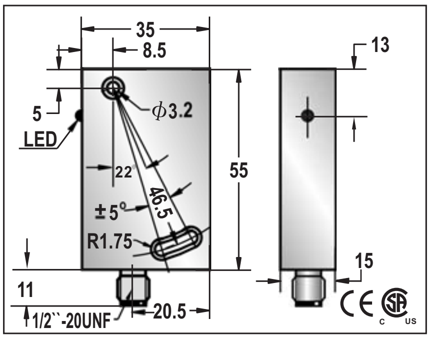

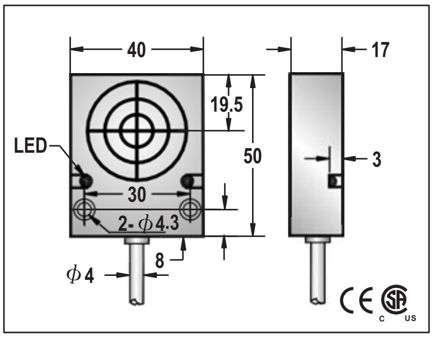

Q35x55x15	Q35x55x15	Q40x50x17
20-250VAC,50-60Hz;20-250VDC	20-250VAC,50-60Hz;20-250VDC	20-250VAC,50-60Hz;20-250VDC
DC RIPPLE <10%	DC RIPPLE <10%	DC RIPPLE <10%
<2.5mA	<2.5mA	<2.5mA
200mA	200mA	200mA
<2.5mA	<2.5mA	<2.5mA
2.2A for 20ms	2.2A for 20ms	2.2A for 20ms
5mA	5mA	5mA
<=10VAC;<=8VDC	<=10VAC;<=8VDC	<=10VAC;<=8VDC
25Hz AC;40Hz DC	25HZ AC;40Hz DC	25HZ AC;40Hz DC
10ms/10ms	10ms/10ms	10ms/10ms
<15% (Sr)	<15% (Sr)	<15% (Sr)
<1%(Sr)	<1%(Sr)	<1%(Sr)
IP67	IP67	IP67
-25°C-+70°C	-25°C-+70°C	-25°C-+70°C
<15% (Sr)	<15% (Sr)	<15% (Sr)
-	-	-
-	-	-
-	-	-
RFI>3V/m / EFT>1KV / ESD>4KV (contact)	RFI>3V/m / EFT>1KV / ESD>4KV (contact)	RFI>3V/m / EFT>1KV / ESD>4KV (contact)
IEC 60947-5-2,Part 7.4.1 / IEC 60947-5-2,Part 7.4.2	IEC 60947-5-2,Part 7.4.1 / IEC 60947-5-2,Part 7.4.2	IEC 60947-5-2,Part 7.4.1 / IEC 60947-5-2,Part 7.4.2
PBT	PBT	PBT

Q35x55x15			Q35x55x15			Q40x50x17		
CQP1-3525U-A2L2T	9	CQP2-3535U-A2L2T	CQP1-3525U-AUL3T	58	CQP2-3535U-AUL3T	CQP1-4130U-A2L2T	9	CQP2-4140U-A2L2T
CQP1-3525U-B2L2T	10	CQP2-3535U-B2L2T	CQP1-3525U-BUL3T	58	CQP2-3535U-BUL3T	CQP1-4130U-B2L2T	10	CQP2-4140U-B2L2T

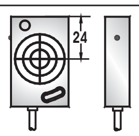

sensing face.

Q35x55x15	Q35x55x15	Q40x50x17
4∅3x0.15		4∅3x0.15
approx.110g	approx.75g	approx.100g

Note:
Coming Soon : Part numbers with underline

AC/DC CAPACITIVE PROXIMITY SWITCH PLASTIC HOUSING SQUARE TYPE

Q40x50x17		Q80	Q80
●	○	○	○
2-30mm (adjustable)	2-40mm (adjustable)	5-50mm (adjustable)	5-50mm (adjustable)
PBT RESIN		PBT RESIN	PBT RESIN
●		●	●

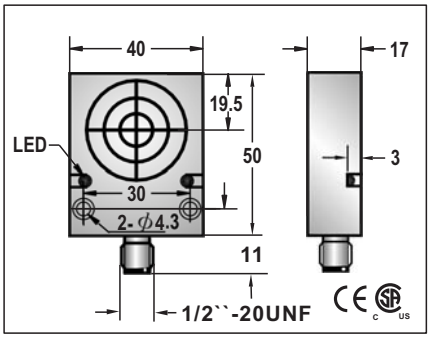

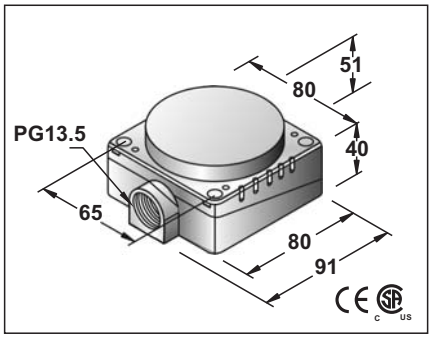

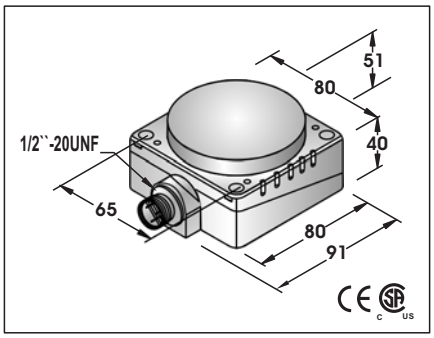

20-250VAC,50-60Hz;20-250VDC			20-250VAC,50-60Hz;20-250VDC			20-250VAC,50-60Hz;20-250VDC	
DC RIPPLE <10%			DC RIPPLE <10%			DC RIPPLE <10%	
<2.5mA			<2.5mA			<2.5mA	
200mA			200mA			200mA	
<2.5mA			<2.5mA			<2.5mA	
2.2A for 20ms			2.2A for 20ms			2.2A for 20ms	
5mA			5mA			5mA	
<=10VAC;<=8VDC			<=10VAC;<=8VDC			<=10VAC;<=8VDC	
25HZ AC;40Hz DC			25HZ AC;40Hz DC			25HZ AC;40Hz DC	
10ms/10ms			10ms/10ms			10ms/10ms	
<15% (Sr)			<15% (Sr)			<15% (Sr)	
<1%(Sr)			<1%(Sr)			<1%(Sr)	
IP67			IP67			IP67	
-25°C– +70°C			-25°C– +70°C			-25°C– +70°C	
<15% (Sr)			<15% (Sr)			<15% (Sr)	
-			-			-	
-			-			-	
-			-			-	
RFI>3V/m / EFT>1KV / ESD>4KV (contact)			RFI>3V/m / EFT>1KV / ESD>4KV (contact)			RFI>3V/m / EFT>1KV / ESD>4KV (contact)	
IEC 60947-5-2,Part 7.4.1 / IEC 60947-5-2,Part 7.4.2			IEC 60947-5-2,Part 7.4.1 / IEC 60947-5-2,Part 7.4.2			IEC 60947-5-2,Part 7.4.1 / IEC 60947-5-2,Part 7.4.2	
PBT			PBT			PBT	
CQP1-4130U-AUL3T	58	CQP2-4140U-AUL3T	CQP2-8050U-A2LT	9		CQP2-8050U-AUL3T	58
CQP1-4130U-BUL3T	58	CQP2-4140U-BUL3T	CQP2-8050U-B2LT	10		CQP2-8050U-BUL3T	58
approx.85g			approx.75g			approx.100g	

Note:
Coming Soon : Part numbers with underline

AC/DC CAPACITIVE PROXIMITY SWITCH PLASTIC HOUSING SQUARE TYPE

Q80	Q40		Q40	
○	●	○	●	○
5-50mm (adjustable)	2-30mm (adjustable)	2-40mm (adjustable)	2-30mm (adjustable)	2-40mm (adjustable)
PBT RESIN	PBT RESIN		PBT RESIN	
●	●		●	

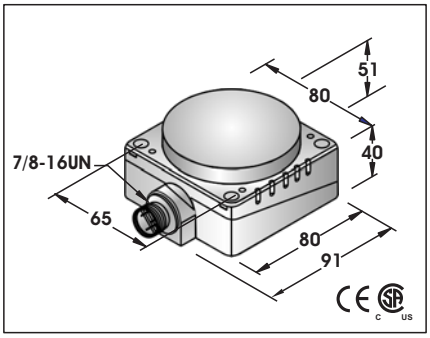

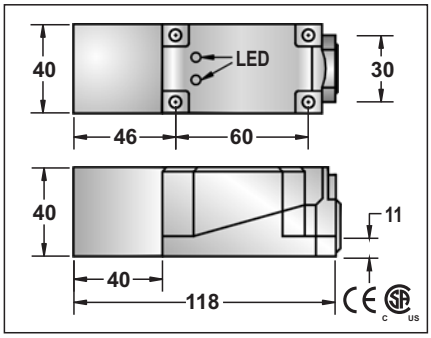

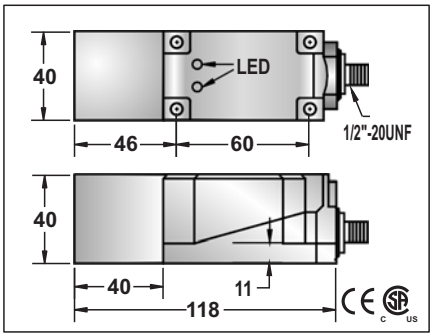

Q80	Q40		Q40	
20-250VAC,50-60Hz;20-250VDC	20-250VAC,50-60Hz;20-250VDC		20-250VAC,50-60Hz;20-250VDC	
DC RIPPLE <10%	DC RIPPLE <10%		DC RIPPLE <10%	
<2.5mA	<2.5mA		<2.5mA	
200mA	200mA		200mA	
<2.5mA	<2.5mA		<2.5mA	
2.2A for 20ms	2.2A for 20ms		2.2A for 20ms	
5mA	5mA		5mA	
<=10VAC;<=8VDC	<=10VAC;<=8VDC		<=10VAC;<=8VDC	
25HZ AC;40Hz DC	25HZ AC;40Hz DC		25HZ AC;40Hz DC	
10ms/10ms	10ms/10ms		10ms/10ms	
<15% (Sr)	<15% (Sr)		<15% (Sr)	
<1%(Sr)	<1%(Sr)		<1%(Sr)	
IP67	IP67		IP67	
-25°C– +70°C	-25°C– +70°C		-25°C– +70°C	
<15% (Sr)	<15% (Sr)		<15% (Sr)	
-	-		-	
-	-		-	
-	-		-	
RFI>3V/m / EFT>1KV / ESD>4KV (contact)	RFI>3V/m / EFT>1KV / ESD>4KV (contact)		RFI>3V/m / EFT>1KV / ESD>4KV (contact)	
IEC 60947-5-2,Part 7.4.1 / IEC 60947-5-2,Part 7.4.2	IEC 60947-5-2,Part 7.4.1 / IEC 60947-5-2,Part 7.4.2		IEC 60947-5-2,Part 7.4.1 / IEC 60947-5-2,Part 7.4.2	
PBT	PBT		PBT	
CQP2-8050U-AZL2T	66	CQP1-4030U-A2L	9	CQP2-4040U-A2L	CQP1-4030U-AUL3	58	CQP2-4040U-AUL3
CQP2-8050U-BZL2T	66	CQP1-4030U-B2L	10	CQP2-4040U-B2L	CQP1-4030U-BUL3	58	CQP2-4040U-BUL3
approx.85g		approx.75g			approx.100g		

Note:
Coming Soon : Part numbers with underline

AC/DC CAPACITIVE PROXIMITY SWITCH PLASTIC HOUSING SQUARE TYPE

Q40			Q40s			Q40s		
●	○		●	○		●	○	
2-30mm (adjustable)	2-40mm (adjustable)		2-30mm (adjustable)	2-40mm (adjustable)		2-30mm (adjustable)	2-40mm (adjustable)	
PBT RESIN			PBT RESIN			PBT RESIN		
●			●			●		
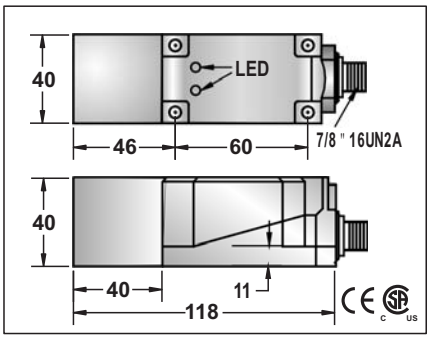			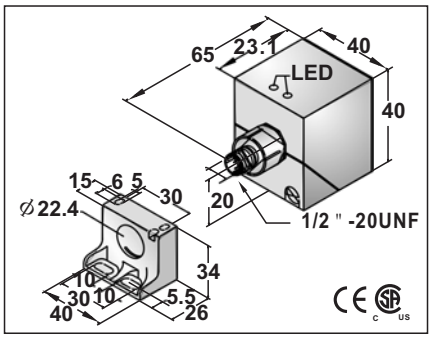			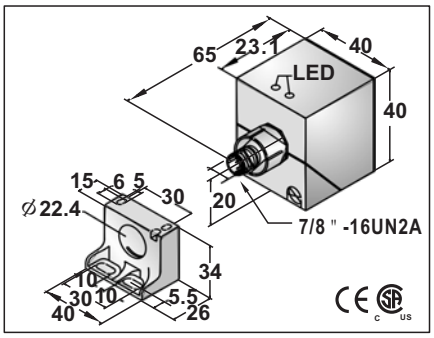		
20-250VAC,50-60Hz;20-250VDC			20-250VAC,50-60Hz;20-250VDC			20-250VAC,50-60Hz;20-250VDC		
DC RIPPLE <10%			DC RIPPLE <10%			DC RIPPLE <10%		
<2.5mA			<2.5mA			<2.5mA		
200mA			200mA			200mA		
<2.5mA			<2.5mA			<2.5mA		
2.2A for 20ms			2.2A for 20ms			2.2A for 20ms		
5mA			5mA			5mA		
<=10VAC;<=8VDC			<=10VAC;<=8VDC			<=10VAC;<=8VDC		
25HZ AC;40Hz DC			25HZ AC;40Hz DC			25HZ AC;40Hz DC		
10ms/10ms			10ms/10ms			10ms/10ms		
<15% (Sr)			<15% (Sr)			<15% (Sr)		
<1%(Sr)			<1%(Sr)			<1%(Sr)		
IP67			IP67			IP67		
-25°C– +70°C			-25°C– +70°C			-25°C– +70°C		
<15% (Sr)			<15% (Sr)			<15% (Sr)		
-			-			-		
-			-			-		
-			-			-		
RFI>3V/m / EFT>1KV / ESD>4KV (contact)			RFI>3V/m / EFT>1KV / ESD>4KV (contact)			RFI>3V/m / EFT>1KV / ESD>4KV (contact)		
IEC 60947-5-2,Part 7.4.1 / IEC 60947-5-2,Part 7.4.2			IEC 60947-5-2,Part 7.4.1 / IEC 60947-5-2,Part 7.4.2			IEC 60947-5-2,Part 7.4.1 / IEC 60947-5-2,Part 7.4.2		
PBT			PBT			PBT		
CQP1-4030U-AZL2	66	CQP2-4040U-AZL2	CQP1-4030U-AUL3	58	CQP2-4040U-AUL3	CQP1-4030U-AZL2	66	CQP2-4040U-AZL2
CQP1-4030U-BZL2	66	CQP2-4040U-BZL2	CQP1-4030U-BUL3	58	CQP2-4040U-BUL3	CQP1-4030U-BZL2	66	CQP2-4040U-BZL2
approx.85g			approx.75g			approx.100g		

Note:
Coming Soon : Part numbers with underline

AC/DC CAPACITIVE PROXIMITY SWITCH PLASTIC HOUSING SQUARE TYPE

Q50	Q50	Q50
○	○	○
2-50mm (adjustable)	**2-50mm** (adjustable)	**2-50mm** (adjustable)
PBT RESIN	PBT RESIN	PBT RESIN
●	●	●
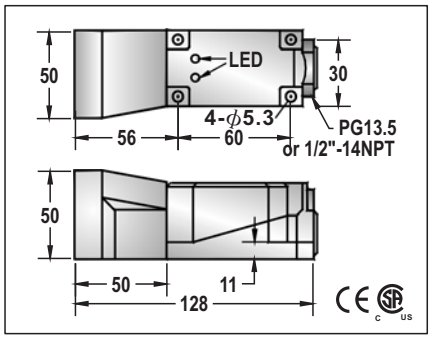	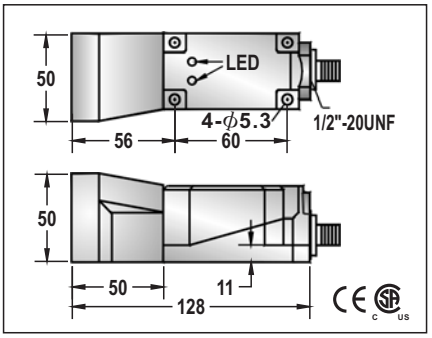	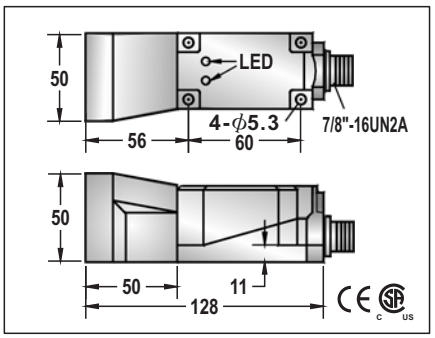
20-250VAC,50-60Hz;20-250VDC	20-250VAC,50-60Hz;20-250VDC	20-250VAC,50-60Hz;20-250VDC
DC RIPPLE <10%	DC RIPPLE <10%	DC RIPPLE <10%
<2.5mA	<2.5mA	<2.5mA
200mA	200mA	200mA
<2.5mA	<2.5mA	<2.5mA
2.2A for 20ms	2.2A for 20ms	2.2A for 20ms
5mA	5mA	5mA
<=10VAC;<=8VDC	<=10VAC;<=8VDC	<=10VAC;<=8VDC
25HZ AC;40Hz DC	25HZ AC;40Hz DC	25HZ AC;40Hz DC
10ms/10ms	10ms/10ms	10ms/10ms
<15% (Sr)	<15% (Sr)	<15% (Sr)
<1%(Sr)	<1%(Sr)	<1%(Sr)
IP67	IP67	IP67
-25°C– + 70°C	-25°C– + 70°C	-25°C– + 70°C
<15% (Sr)	<15% (Sr)	<15% (Sr)
-	-	-
-	-	-
-	-	-
RFI>3V/m / EFT>1KV / ESD>4KV (contact)	RFI>3V/m / EFT>1KV / ESD>4KV (contact)	RFI>3V/m / EFT>1KV / ESD>4KV (contact)
IEC 60947-5-2,Part 7.4.1 / IEC 60947-5-2,Part 7.4.2	IEC 60947-5-2,Part 7.4.1 / IEC 60947-5-2,Part 7.4.2	IEC 60947-5-2,Part 7.4.1 / IEC 60947-5-2,Part 7.4.2
PBT	PBT	PBT
CQP2-5050U-A2L 9	CQP2-5050U-AUL3 58	CQP2-5050U-AZL2 66
CQP2-5050U-B2L 10	CQP2-5050U-BUL3 58	CQP2-5050U-BZL2 66
approx.85g	approx.75g	approx.100g

Note:

Coming Soon : Part numbers with underline

In Preparation: Part numbers with a line through the middle

AC/DC CAPACITIVE PROXIMITY SWITCH PLASTIC HOUSING SQUARE TYPE

Q50s	Q50s	Q60s
○	○	○
2-30mm (adjustable)	**2-30mm** (adjustable)	**2-40mm** (adjustable)
PBT RESIN	PBT RESIN	PBT RESIN
●	●	●
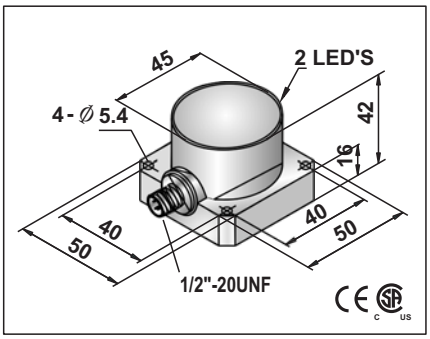	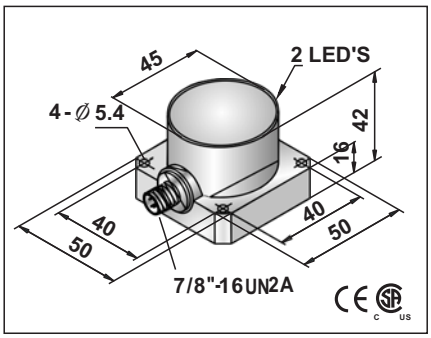	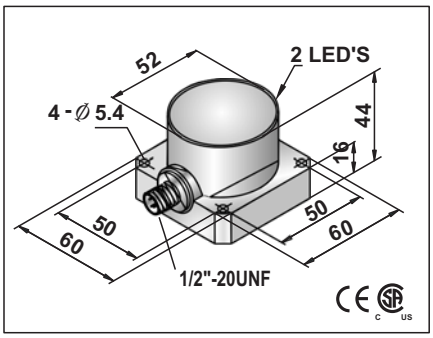
20-250VAC,50-60Hz;20-250VDC	20-250VAC,50-60Hz;20-250VDC	20-250VAC,50-60Hz;20-250VDC
DC RIPPLE <10%	DC RIPPLE <10%	DC RIPPLE <10%
<2.5mA	<2.5mA	<2.5mA
200mA	200mA	200mA
<2.5mA	<2.5mA	<2.5mA
2.2A for 20ms	2.2A for 20ms	2.2A for 20ms
5mA	5mA	5mA
<=10VAC;<=8VDC	<=10VAC;<=8VDC	<=10VAC;<=8VDC
25HZ AC;40Hz DC	25HZ AC;40Hz DC	25HZ AC;40Hz DC
10ms/10ms	10ms/10ms	10ms/10ms
<15% (Sr)	<15% (Sr)	<15% (Sr)
<1%(Sr)	<1%(Sr)	<1%(Sr)
IP67	IP67	IP67
-25°C– +70°C	-25°C– +70°C	-25°C– +70°C
<15% (Sr)	<15% (Sr)	<15% (Sr)
-	-	-
-	-	-
-	-	
RFI>3V/m / EFT>1KV / ESD>4KV (contact)	RFI>3V/m / EFT>1KV / ESD>4KV (contact)	RFI>3V/m / EFT>1KV / ESD>4KV (contact)
IEC 60947-5-2,Part 7.4.1 / IEC 60947-5-2,Part 7.4.2	IEC 60947-5-2,Part 7.4.1 / IEC 60947-5-2,Part 7.4.2	IEC 60947-5-2,Part 7.4.1 / IEC 60947-5-2,Part 7.4.2
PBT	PBT	PBT
CQP2-5030U-AUL3T 58	CQP2-5030U-AZL2T 66	CQP2-6040U-AUL3T 58
CQP2-5030U-BUL3T 58	CQP2-5030U-BZL2T 66	CQP2-6040U-BUL3T 58
approx.70g	approx.70g	approx.80g

Note:
Coming Soon : Part numbers with underline

AC/DC CAPACITIVE PROXIMITY SWITCH PLASTIC HOUSING SQUARE TYPE

Q60s		
○		
2-40mm (adjustable)		
PBT RESIN		
●		

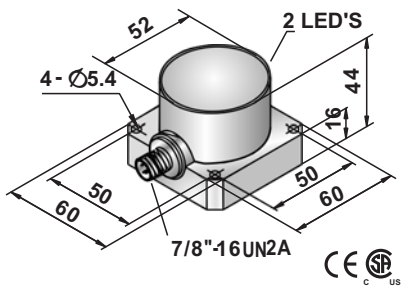

20-250VAC,50-60Hz;20-250VDC		
DC RIPPLE <10%		
<2.5mA		
200mA		
<2.5mA		
2.2A for 20ms		
5mA		
<=10VAC;<=8VDC		
25HZ AC;40Hz DC		
10ms/10ms		
<15% (Sr)		
<1%(Sr)		
IP67		
-25°C– +70°C		
<15% (Sr)		
-		
-		
-		
RFI>3V/m / EFT>1KV / ESD>4KV (contact)		
IEC 60947-5-2,Part 7.4.1 / IEC 60947-5-2,Part 7.4.2		
PBT		

CQP2-6040U-AZL2T	66		
CQP2-6040U-BZL2T	66		

approx.80g		

Note:
Coming Soon : Part numbers with underline